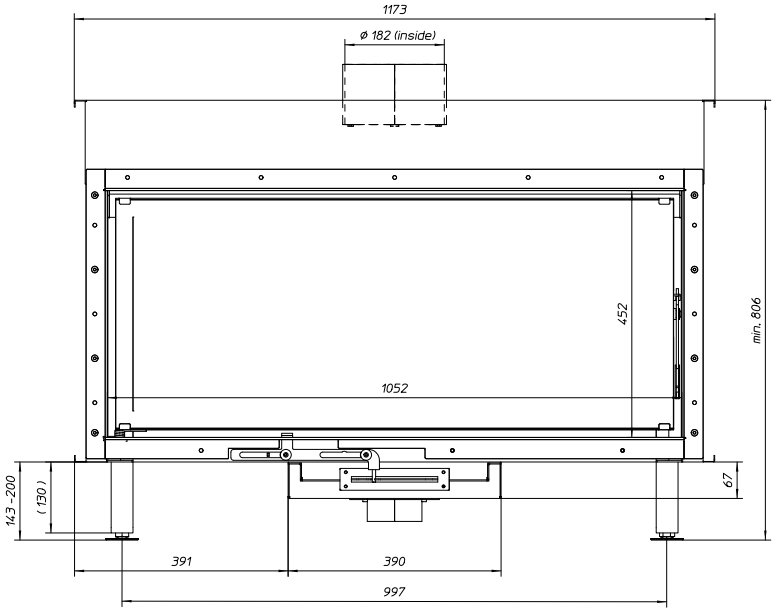

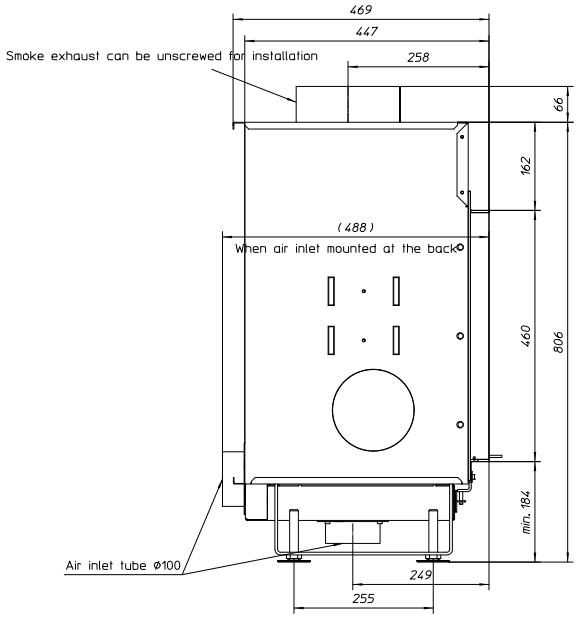

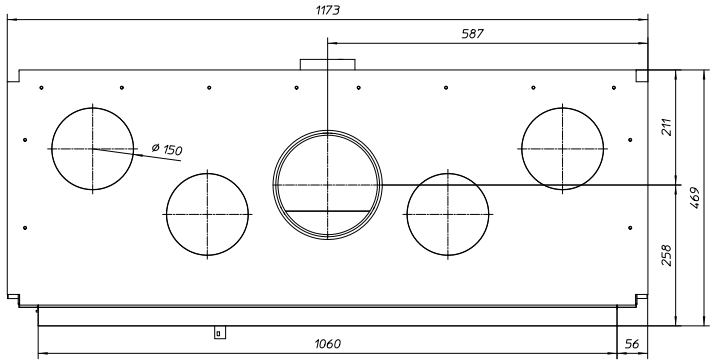

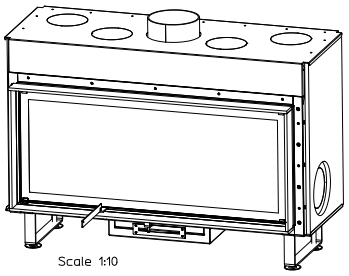

metalfire
architectural fireplaces

model **CITIZEN MF 1050-45 WHE 1S**

Dimensions (mm)

- combustion opening WxH	1052 x 452
- external WxDxH	1173 x 469 x 874
- fresh air	1 x Ø100
- diam. flue	Ø180

Technical Data

- capacity:	13.4 kW
- efficiency capacity:	79%
- CO (volume with 13%O2):	0.09%
- dust (volume with 13%O2):	23mg/Nm^3
- min. insulation thickness (mm)*:	NC-NC-77-94
- weight:	230kg

Specifications

- inside: finishing heat-resistant black paint
- vermiculite insulation plates
- convection jacket in galvanized steel
- side-hinged door in heat-resistant glass
- interior finish: ORIGINAL (ribbed cast iron)

Options

- promat insulation kit

* minimum insulation thickness starting from inflamable materials:

THICKNESS TOPSIDE - THICKNESS BOTTOMSIDE - THICKNESS REARSIDE - THICKNESS SIDE

scale 1:20

www.metalfire.eu EN 13229 CE

General dimensional tolerances up to 6mm
Metalfire preserves the right to modify specifications without previous notice